Part No.	L
SST-4207	6 mm
SST-4208	9 mm

Tolerances Unless Otherwise	
L ≦ 10	±0.3
10 < L ≦ 100	±0.5
100 < L	±0.8
Angle	±3°

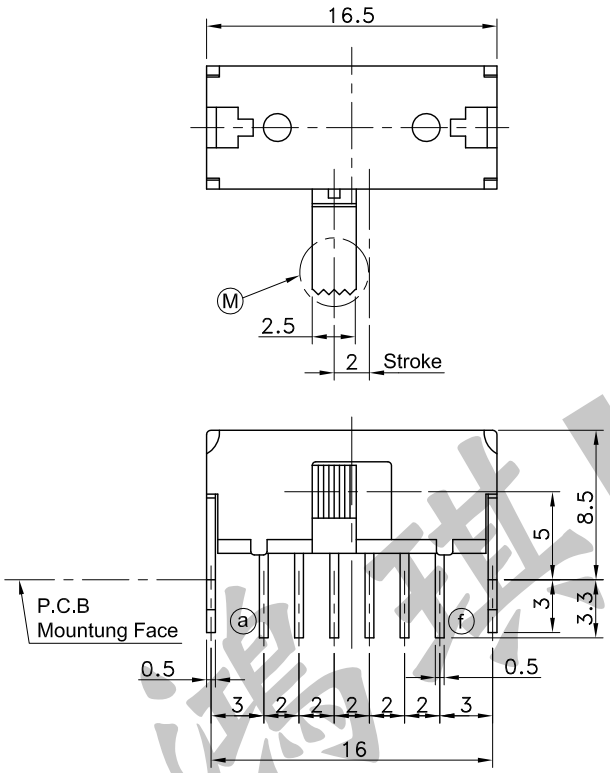

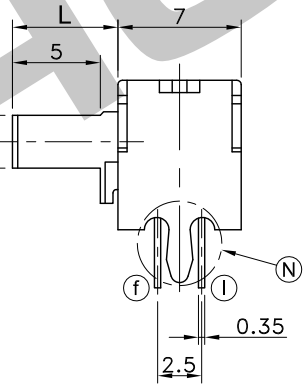

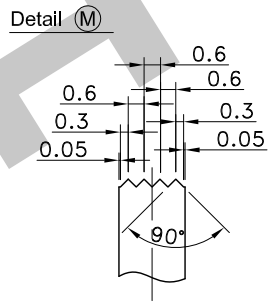

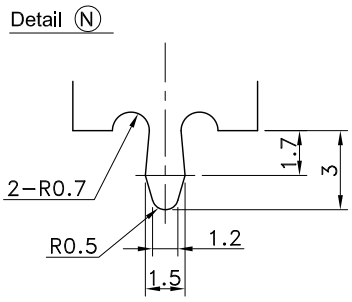

P.C.B TERMINAL POSITION

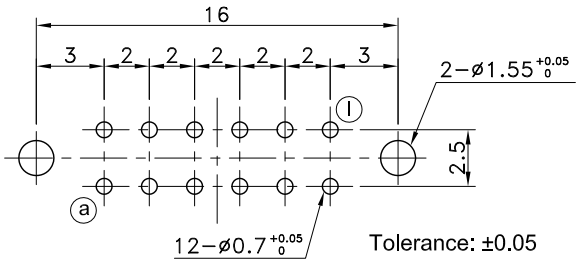

CIRCUIT ARRANGEMENT

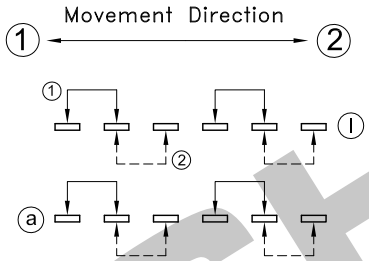

SOLDERING CONDITIONS

	Temperature (°C)	Time (Sec.)
Auto Soldering	260±5	5 +0 -1
Manual Soldering	350±10	5 Max.

SPECIFICATIONS

1. Rating : DC 30V 100mA
2. Contact Resistance : 25mΩ Max.
3. Insulation Resistance : 100MΩ Min. at DC 500V
4. Dielectric Strength : AC 500V for 1 Minute
5. Operating Force : 300±100gf
6. Stroke : 2mm
7. Life : 10,000 Cycles
8. Operating Temperature Range : -40~+85°C

REVISION:	DATE:	REVISION:	DATE:
UNIT:mm	THIRD ANGLE PROJECTION METHOD	TOL. UNLESS OTHERWISE STATED:	CODE NO.:HCH-2328
ISSUED	CONFIRMED		PART NO.
John	Elvis	HORNG CHIH	SST-4207
2020.03.09	2020.03.09	ISO9001 Certified ISO14001 Certified 鴻琪股份有限公司	SST-4208

鴻琪 HCH