PUSH SWITCHES

PTS-265 (OFF)-ON

(OFF)=Momentary

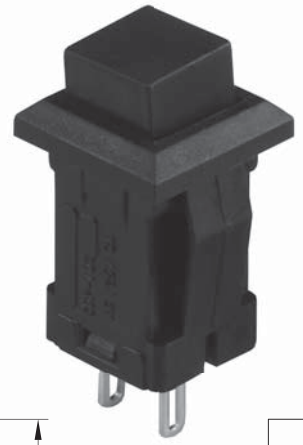

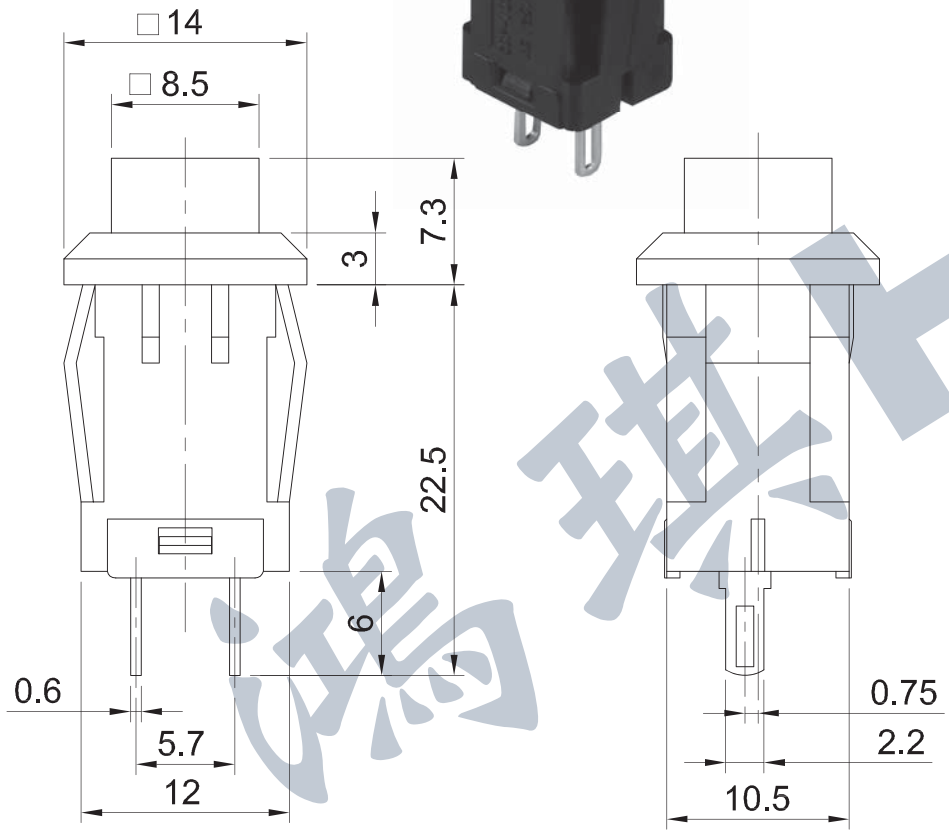

- Rating: AC125V 3A
  AC250V 1.5A
- Force: 100~500gf
- Life: 10,000 Cycles

Body / Knob	Code
Black / Black	050
Black / Red	051
Black / White	052
White / Black	060
White / Red	061
White / White	062

Panel Mounting Hole

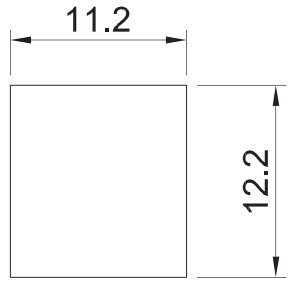

Panel Thickness: 1.2~3.0mm

鴻璟HOH