EARPHONE JACKS

PJK-628 ∅3.6 (4 POLES)

- Rating: DC12V 5A
- Force: 0.4~3.0kgf
- Life: 10,000 Cycles

Circuit

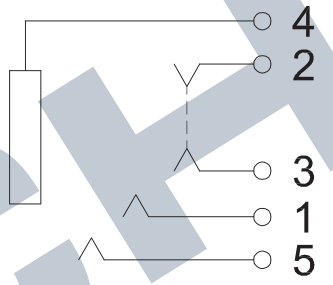

Pad Layout

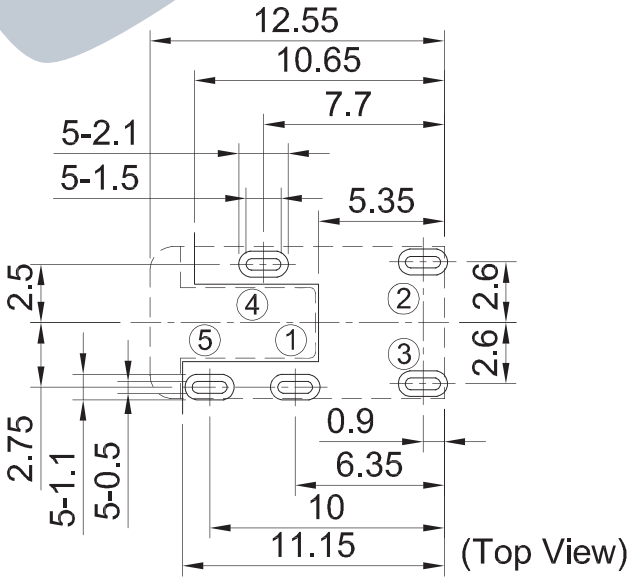

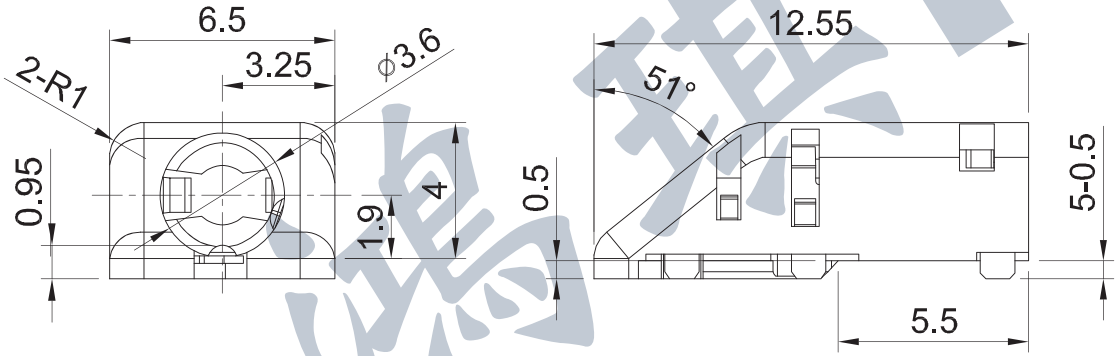

TAPING PACKAGE: 1,400 PCS/REEL

鴻琪HCH