EARPHONE JACKS

PJK-410 ∅3.6 (2 POLES WITH 1 SWITCH)

- Rating: DC12V 1A
- Force: 0.5~3.0kgf
- Life: 5,000 Cycles

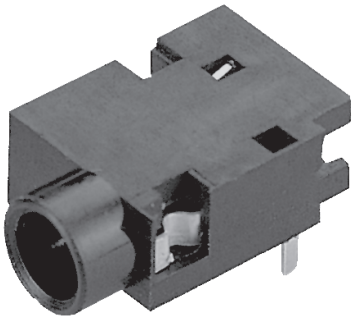

Circuit

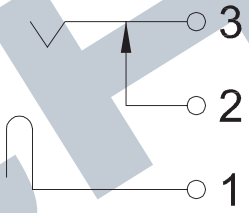

Mounting Hole Layout

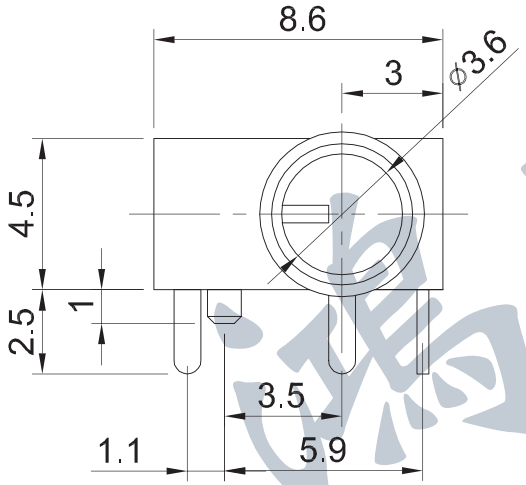

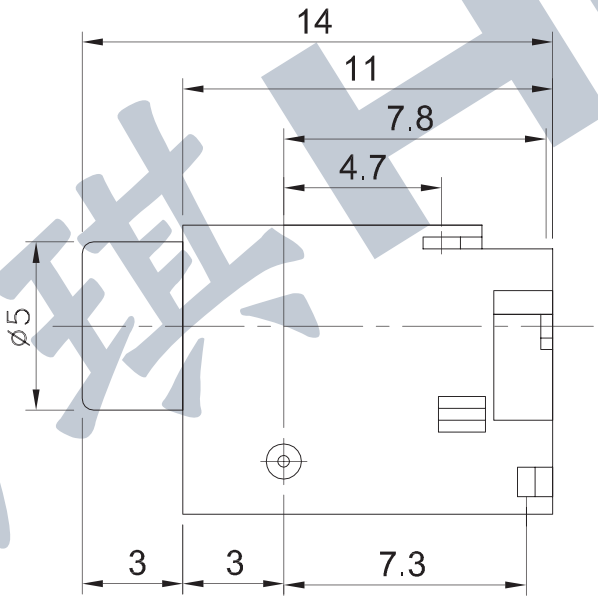

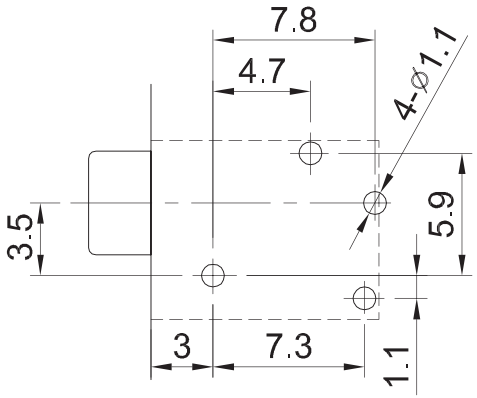

鴻琪HCH