DC POWER JACKS

PJK-147 CENTER PIN : ø1.3

- Rating: DC30V 1A
- Force: 0.3~3.0kgf
- Life: 5,000 Cycles

Circuit

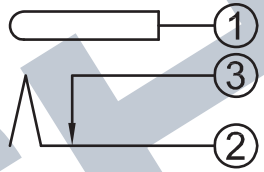

Pad Layout

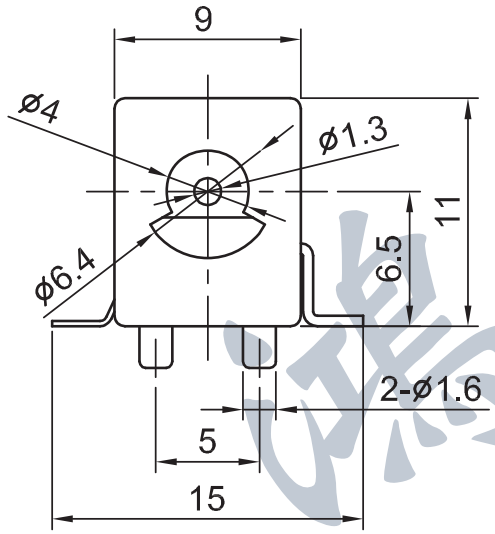

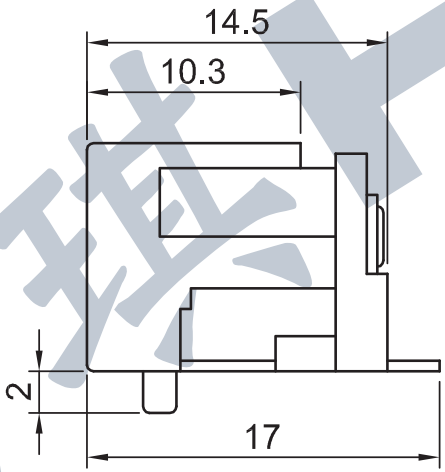

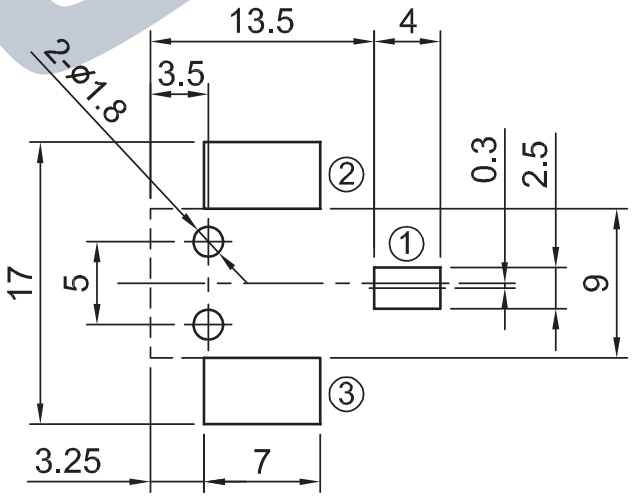

TAPING PACKAGE: 200 PCS/REEL

鴻璂HCH