DC POWER JACKS

PJK-145 CENTER PIN : ø0.65

- Rating: DC20V 4A
- Force: 0.3~3.0kgf
- Life: 5,000 Cycles

Circuit

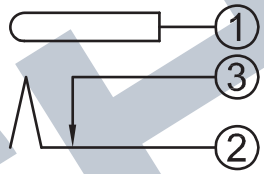

Pad Layout

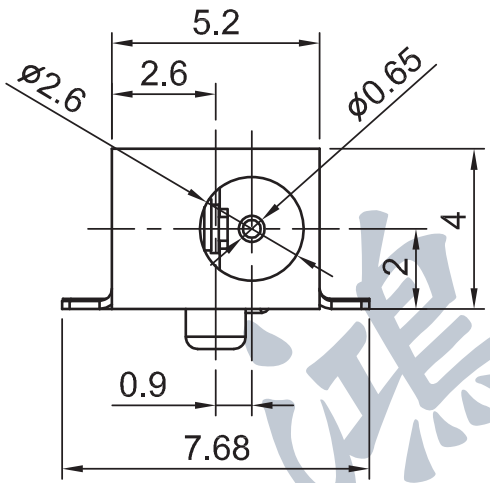

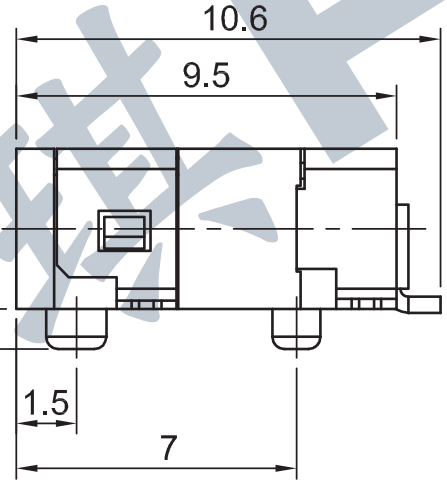

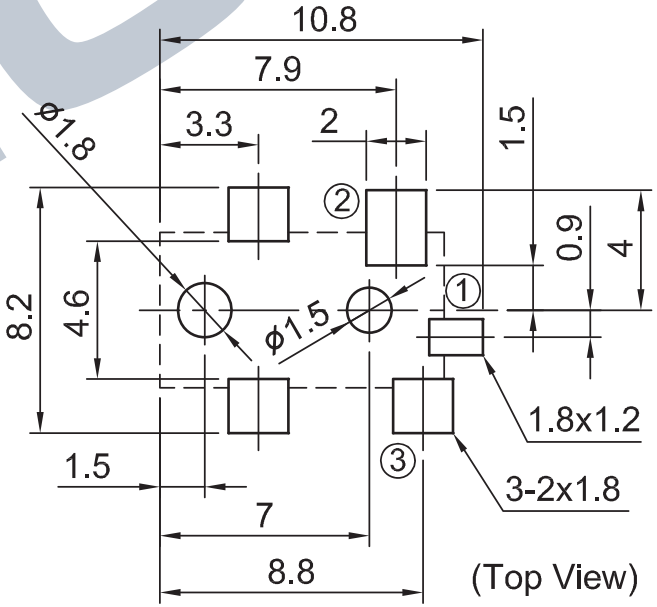

TAPING PACKAGE: 1,000 PCS/REEL

鴻琪HCH