ENCODERS

EVR60-17 30 Position

- Rating: DC5V 10mA
- Detent Position and Angle: 30 Position (12°)
- Detent Torque: 400±100gf • cm
- Life: 40,000 Cycles

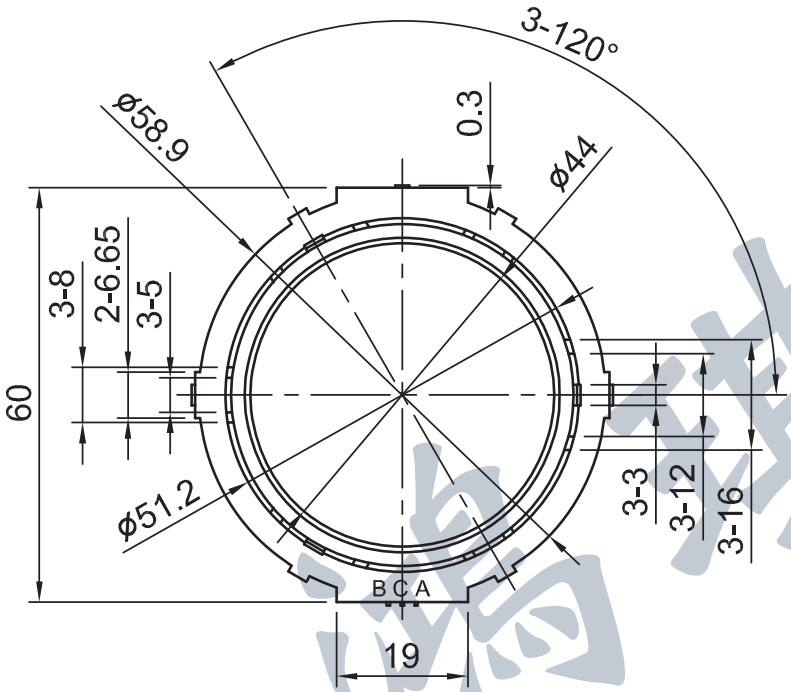

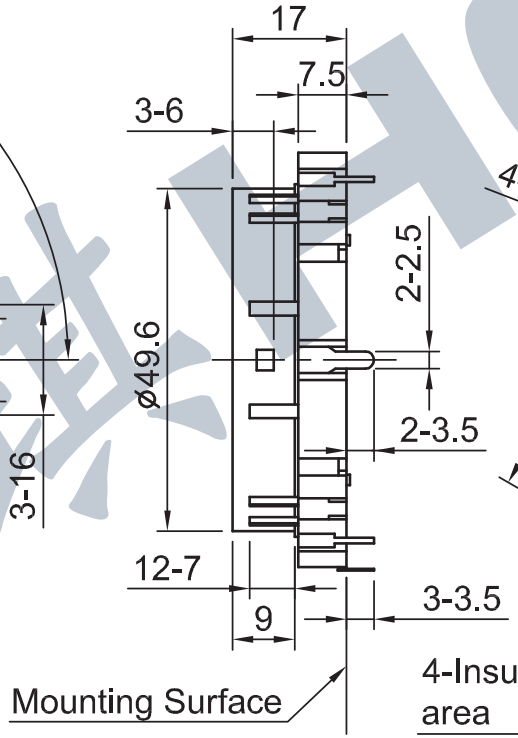

Mounting Hole Layout

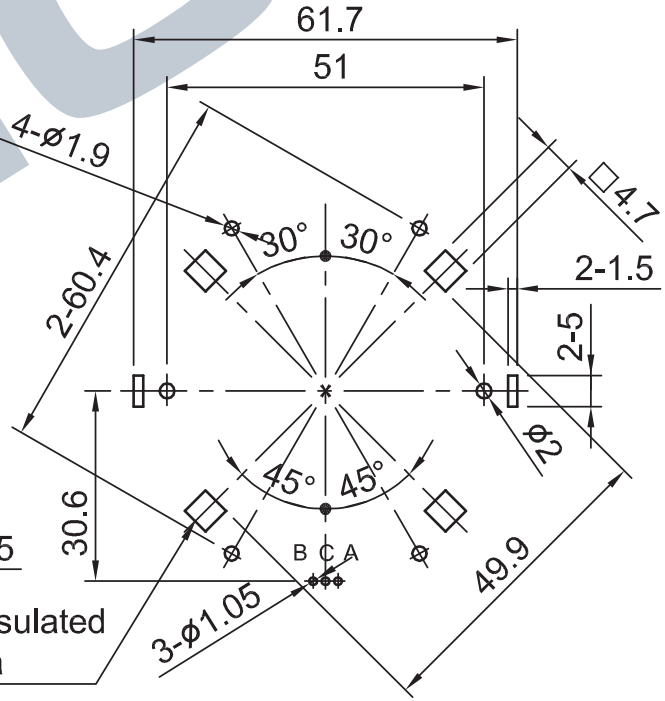

鴻琪 HCH