SLIDE SWITCHES

SST-1200 1P2T

- Rating: DC30V 300mA
- Stroke: 2.0mm
- Force: 150gf
- Life: 10,000 Cycles

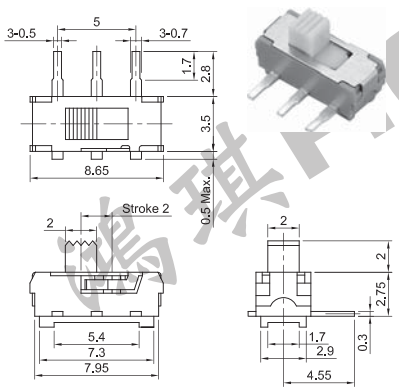

Circuit

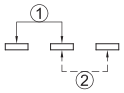

Mounting Hole Layout

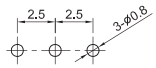

SST-1201 1P2T

- Rating: DC30V 200mA
- Stroke: 2.5mm
- Force: 200±50gf
- Life: 10,000 Cycles

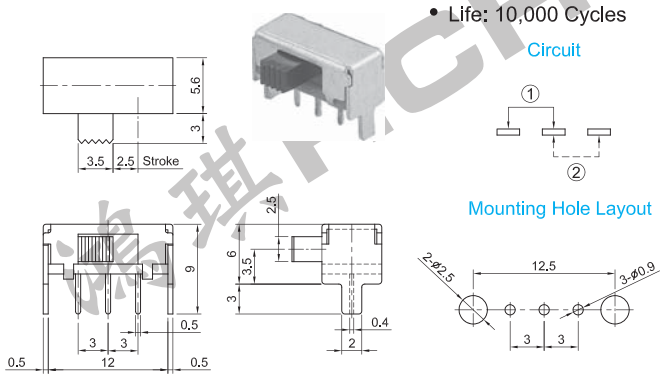

Circuit

Mounting Hole Layout

SST-1203 1P2T

- Rating: DC30V 200mA
- Stroke: 2.0mm
- Force: 275±125gf
- Life: 10,000 Cycles

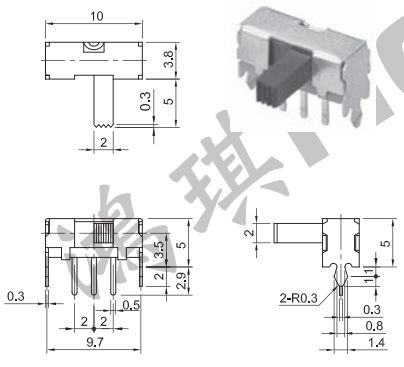

Circuit

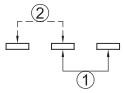

Mounting Hole Layout

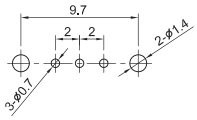

SSS-1216 1P2T

- Rating: DC12V 100mA
- Stroke: 2.0mm
- Force: 250±150gf
- Life: 10,000 Cycles

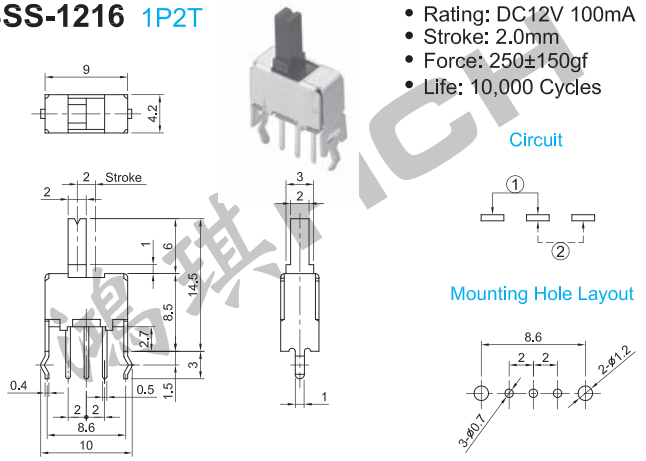

Circuit

Mounting Hole Layout

SST-1300 1P3T

- Rating: DC12V 200mA
- Stroke: 2.0mm
- Force:
  Side→Center:100±50gf
  Center→Side:150±100gf
- Life: 10,000 Cycles

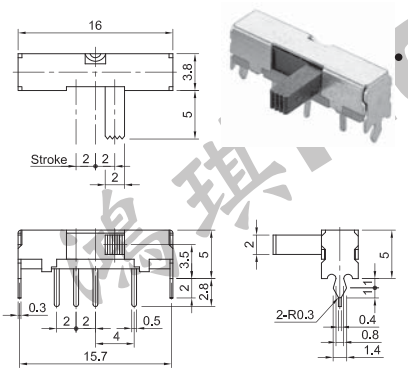

Circuit

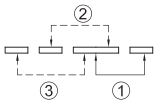

Mounting Hole Layout

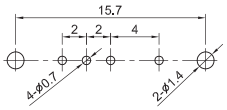

SST-2201 L=4.0mm 2P2T
SST-2202 L=6.0mm

- Rating: DC30V 200mA
- Stroke: 2.0mm
- Force: 200±100gf
- Life: 10,000 Cycles

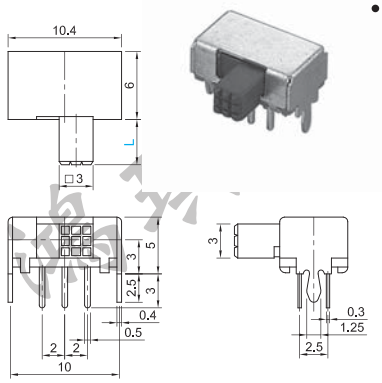

Circuit

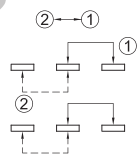

Mounting Hole Layout

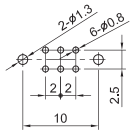

SST-2205 2P2T

- Rating: DC15V 500mA
- Stroke: 4.0mm
- Force: 250±100gf
- Life: 10,000 Cycles

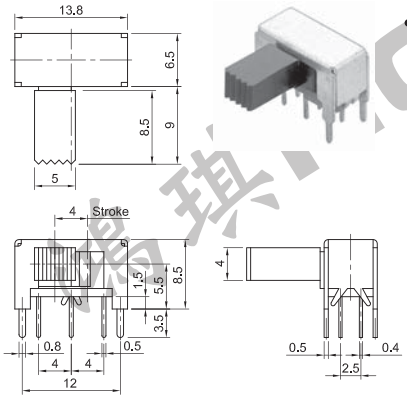

Circuit

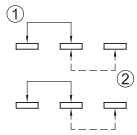

Mounting Hole Layout

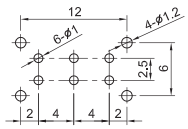

SST-4204 4P2T

- Rating: DC12V 200mA
- Stroke: 2.0mm
- Force: 275±125gf
- Life: 5,000 Cycles

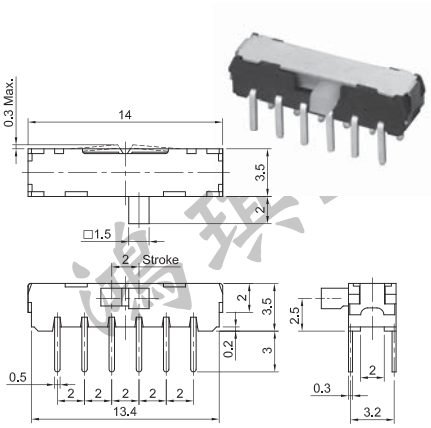

Circuit

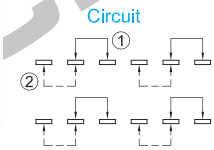

Mounting Hole Layout

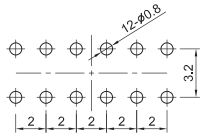

鴻琪 HCH